# SD9713

## Explosion-proof temperature and humidity sensor

### User Manual

File Version: V24.3.23

SD9713 using the standard ,easy access to PLC，DCS and other instruments or systems for monitoring 温 humidity state quantities.The internal use of high-precision sensing core and related devices to ensure high reliability and excellent long-term stability,can be customized RS232,RS485,CAN,4-20mA,DC0~5V\10V,ZIGBEE,Lora,WIFI,GPRS and other output methods.

**Technical Parameters**

| Technical parameter | Parameter value |
|---|---|
| Brand | SONBEST |
| Interface | RS485/4-20mA/DC0-10V |
| Power | DC6~24V 1A |
| Power | DC12~24V 1A |
| Running temperature | -30~85℃ |
| Working humidity | 5%RH~90%RH |

**Product Selection**

Product DesignRS485,4-20mA,DC0-10VMultiple output methods, the products are divided into the following models depending on the output method.

| Product model | output method |
|---|---|
| SD9713B | RS485 总线 |
| SD9713M | 4-20mA |
| SD9713V10 | DC0-10V |

## Product Size

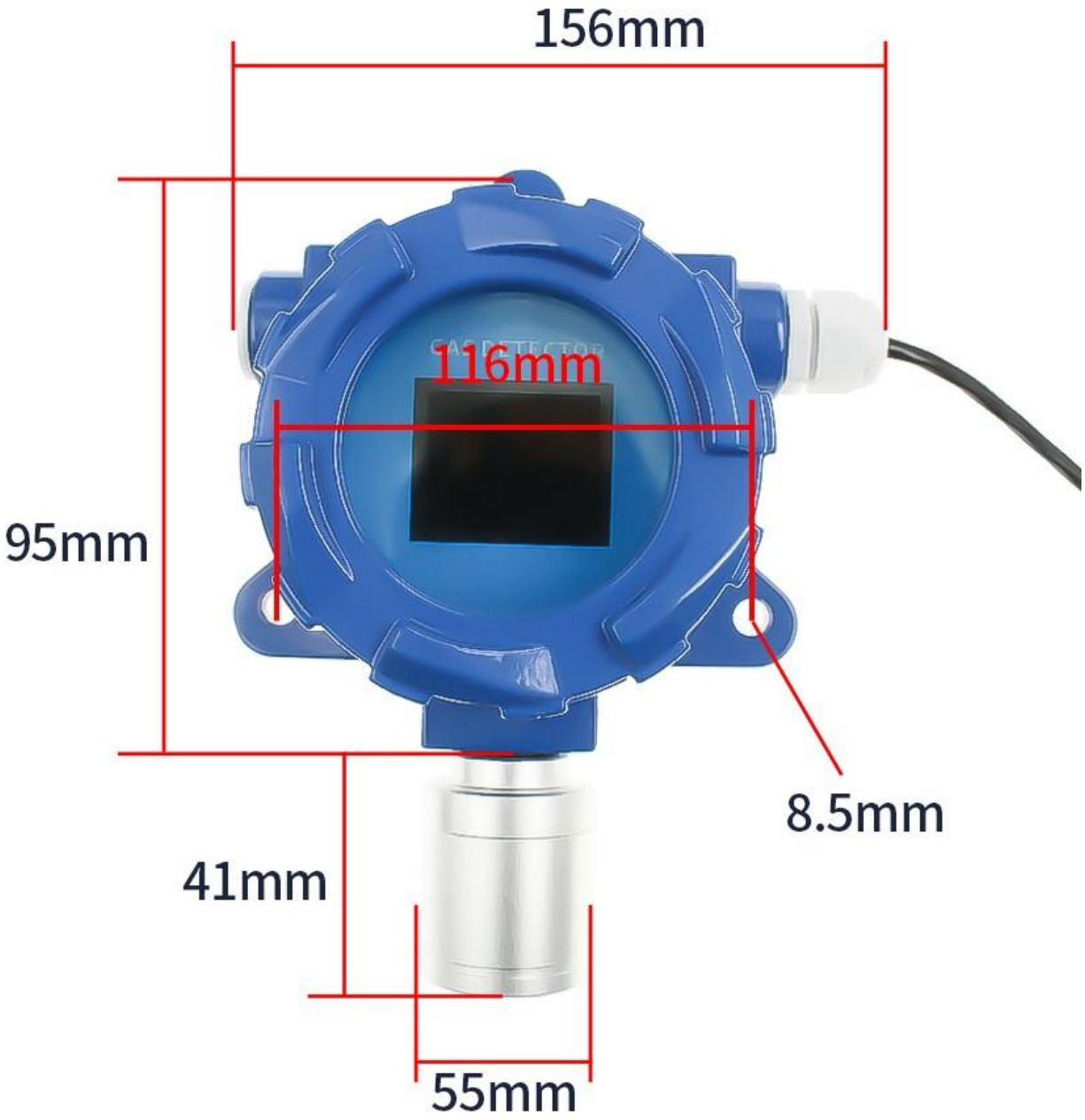
156mm
116mm
95mm
8.5mm
41mm
55mm

| | |
|---|---|
| Product branding | SONBEST |
| Product model | SD9713B / SD9713M / SD9713V |
| RS485 temperature measurement range | -30~80°C |
| Current/voltage temperature range | -40~60°C |
| Temperature measurement accuracy | ±0.3°C (@25°C 65%RH) |
| Humidity measurement range | 0~100%RH |
| Humidity measurement accuracy | ±3%RH (@25°C 65%RH) |
| Output interface | RS485 / DC4~20mA / DC0~10V |
| Terms of Use | MODBUS / DC4~20mA / DC0~10V |
| Supply voltage | DC6~24V / DC12~24V / DC12~24V |
| Opto-coupling isolation | None by default, optional |
| Operating temperature and humidity | -40~80°C 0~95%RH |
| Store at temperature and humidity | -40~80°C 0~95%RH |

# Wiring

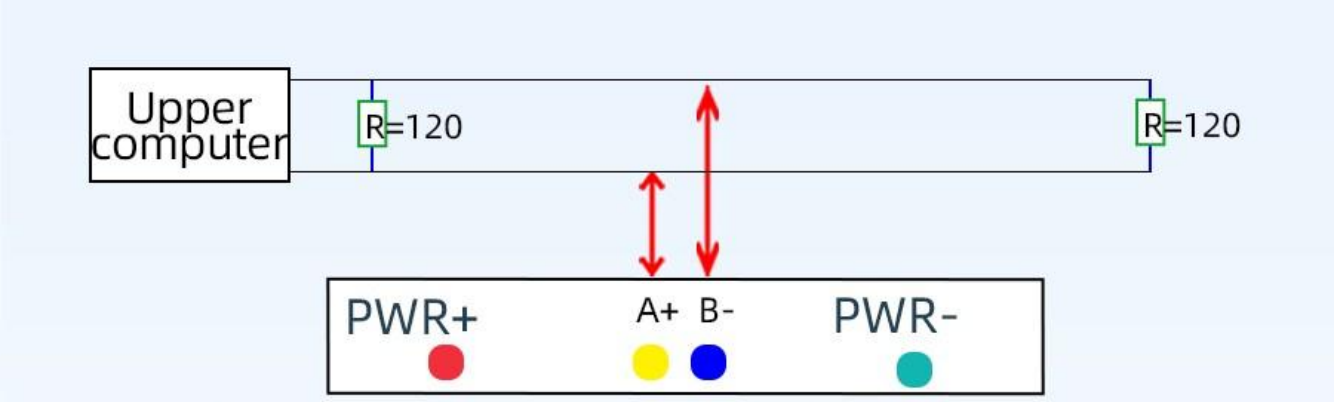


Schematic diagram of RS485 wiring

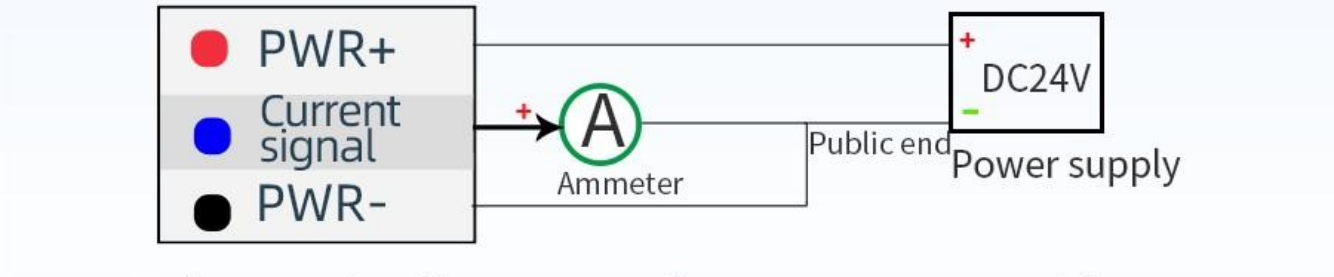


Schematic diagram of current type wiring

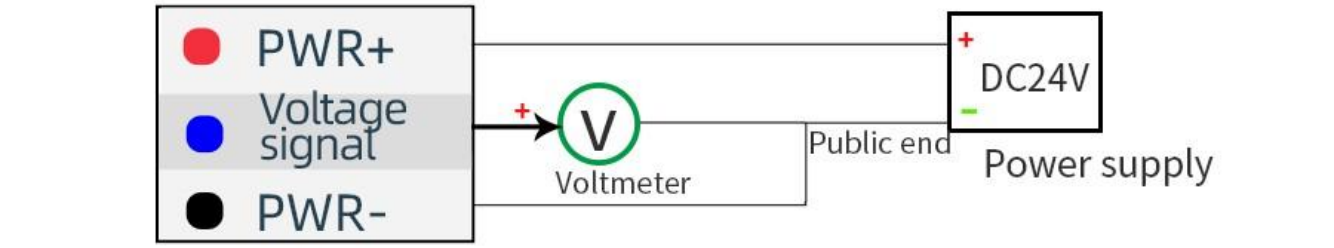


Schematic diagram of voltage type wiring

※Note: The round color icon represents the core color

In the case of broken wires, wire the wires as shown in the figure. If the product itself has no leads, the core color is for reference.

**How to use?**

Farms

Gas station

Mining industry

Communication room

Industrial plants

Archives

**Application solution**

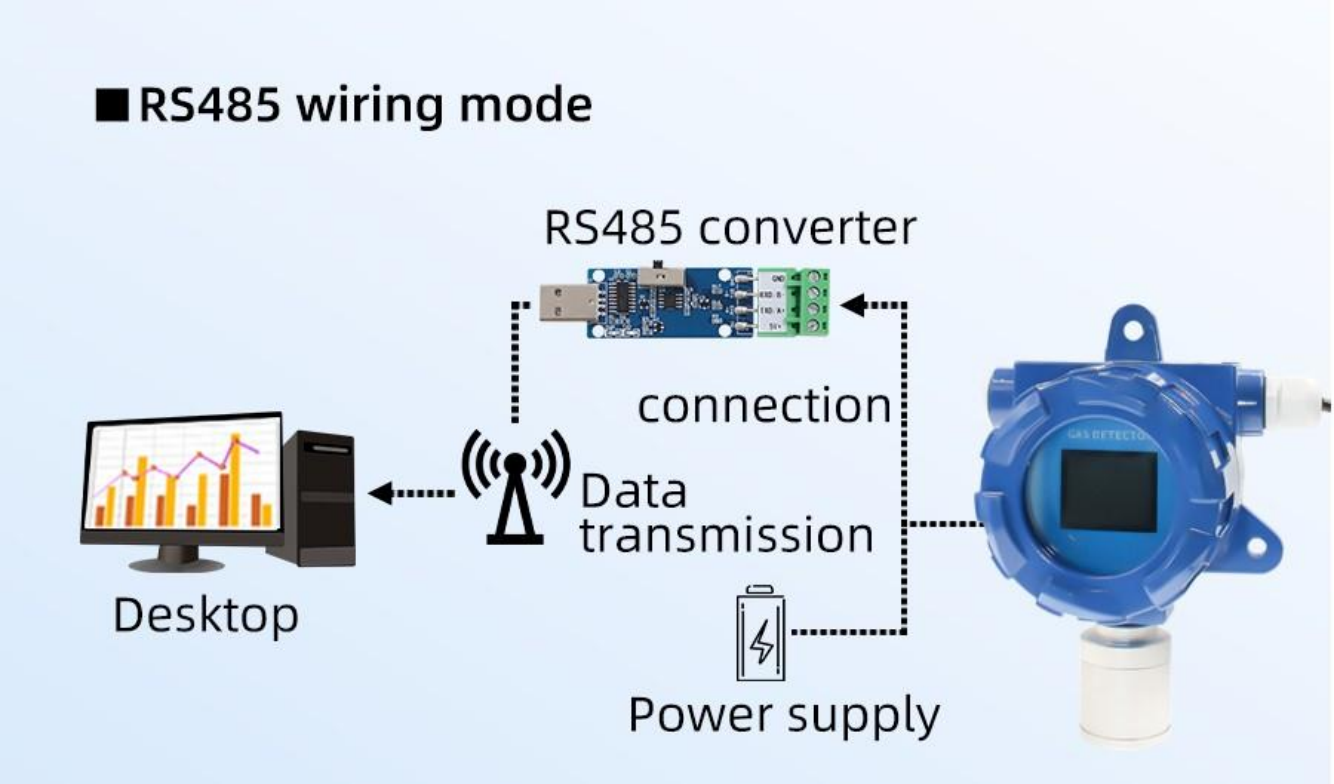


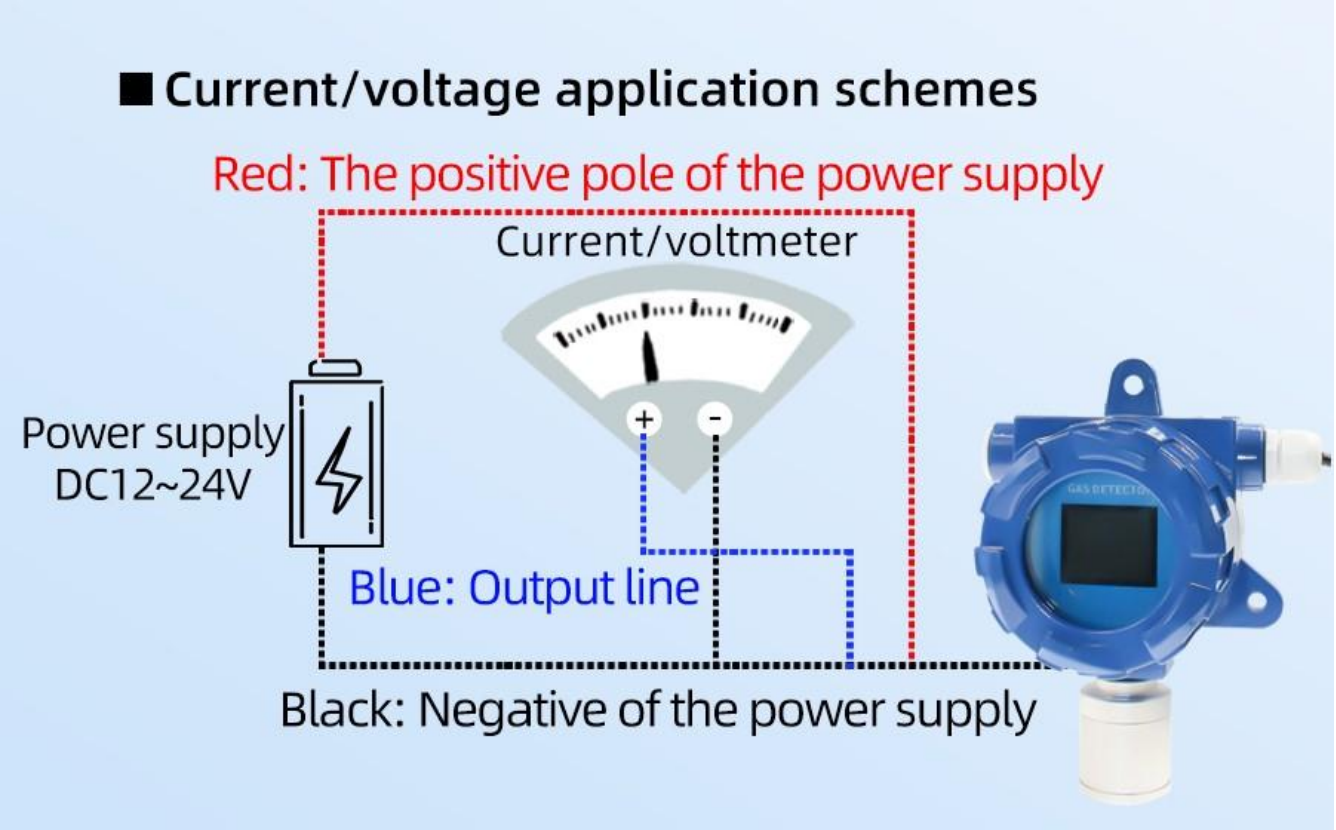


**Product List**

## Communication Protocol

The product uses RS485 MODBUS-RTU standard protocol format, all operation or reply commands are hexadecimal data. The default device address is 1 when the device leaves the factory, and the module or NON-Recorder default baud rate is 9600,8,n,1 ,but data recorder default baud rate is 115200 .

### 1. Read data (function code 0x03)

Inquiry frame (hexadecimal), sending example: query 1 data of 1# device, the upper computer sends the command: 01 03 00 00 00 01 84 0A .

| Address | Function Code | Start Address | Data Length | Check Code |
|---|---|---|---|---|
| 01 | 03 | 00 00 | 00 01 | 84 0A |

For the correct query frame, the device will respond with data: 01 03 02 00 79 79 A6 , response format:

| Address | Function Code | Length | Data 1 | Check Code |
|---|---|---|---|---|
| 01 | 03 | 02 | 00 79 | 79 A6 |

Data description: The data in the command is hexadecimal, take data 1 as an example, 00 79 is converted to decimal value as 121, assuming the data magnification is 100, then the real value is 121/100=1.21, Others and so on.

### 2. Common data address table

| Configuration Address | Register Address | Register Description | Data Type | Value Range |
|---|---|---|---|---|
| 40001 | 00 00 | 温 humidity | Read Only | 0~65535 |
| 40101 | 00 64 | Model Code | Read/Write | 0~65535 |
| 40102 | 00 65 | total number of measuring points | read/write | 1~20 |
| 40103 | 00 66 | device address | read/write | 1~249 |
| 40104 | 00 67 | baud rate | read/write | 0~6 |
| 40105 | 00 68 | communication mode | read/write | 1~4 |

| | | | | |
|---|---|---|---|---|
| 40106 | 00 69 | protocol type | read/write | 1~10 |

## 3 Read and modify device address

### (1) Read or query device address

If you don't know the current device address and there is only one device on the bus, you can query the device address through the commandFA 03 00 66 00 01 71 9E .

| Device Address | Function Code | Start Address | Data Length | Check Code |
|---|---|---|---|---|
| FA | 03 | 00 66 | 00 01 | 71 9E |

FA means 250 is the general address, when you don't know the address, you can use 250 to get the real device address, 00 66 is the device address register.

For the correct query command, the device will respond, for example, the response data is: 0 1 03 02 00 01 79 84, and its format parsing is shown in the following table:

| Device Address | Function Code | Start Address | Model Code | Check Code |
|---|---|---|---|---|
| 01 | 03 | 02 | 00 01 | 79 84 |

In the response data, the first byte 01 represents the real address of the current device.

### (2) Change device address

For example, if the current device address is 1 and we want to change it to 02, the command is: 01 06 00 66 00 02 E8 14 .

| Device Address | Function Code | Register Address | Target Address | Check Code |
|---|---|---|---|---|
| 01 | 06 | 00 66 | 00 02 | E8 14 |

After the change is successful, the device will return the information: 02 06 00 66 00 02 E8 27 , and its format analysis is shown in the following table:

| Device Address | Function Code | Register Address | Target Address | Check Code |
|---|---|---|---|---|
| 02 | 06 | 00 66 | 00 02 | E8 27 |

In the response data, after the modification is successful, the first byte is the new device address. Generally, after the device address is changed, it will take effect immediately. At this time, the user needs to change the query command of his software accordingly. .

## 4 Read and modify baud rate

### (1) Read baud rate

The default factory baud rate of the device is 9600. If you need to change it, you can change it according to the following table and the corresponding communication protocol. For example, to read the baud rate ID of the current device, the command is: 01 03 00 67 00 01 35 D5 , the format is parsed as follows.

| Device Address | Function Code | Start Address | Data Length | Check Code |
|---|---|---|---|---|
| 01 | 03 | 00 67 | 00 01 | 35 D5 |

Read the baud rate code of the current device. Baud rate code: 1 is 2400; 2 is 4800; 3 is 9600; 4 is 19200; 5 is 38400; 6 is 115200.

For the correct query command, the device will respond, for example, the response data is: 01 03 02 00 03 F8 45, and its format analysis is shown in the following table:

| Device Address | Function Code | Data Length | Baud Rate Code | Check Code |
|---|---|---|---|---|
| 01 | 03 | 02 | 00 03 | F8 45 |

According to the baud rate code, 03 is 9600, that is, the baud rate of the current device is 9600.

### (2) Change the baud rate

For example, change the baud rate from 9600 to 38400, that is, change the code from 3 to 5, the command is: 01 06 00 67 00 05 F8 16 .

| Device Address | Function Code | Register Address | Target Baud Rate | Check Code |
|---|---|---|---|---|
| 01 | 06 | 00 67 | 00 05 | F8 16 |

Change the baud rate from 9600 to 38400, that is, change the code from 3 to 5. The new baud rate will take effect immediately, and the device will lose response at this time, and the baud rate of the device needs to be checked accordingly Modified.

## 5 Read and modify correction value

### (1) Read correction value

When there is an error between the data and the reference standard, we can reduce the display error by adjusting the correction value. The correction difference can be modified in a range of plus or minus 1000, that is, the value range is 0-1000 or 64535 -65535. For example, when the displayed value is too small by 100, we can correct it by adding 100. The command is: 01 03 00 6B 00 01 F5 D6 . In the command, 100 is hexadecimal 0x64 ;If you need to reduce it, you can set a negative value, such as -100, the corresponding hexadecimal value is FF 9C, the calculation method is 100-65535=65435, and then converted to hexadecimal, it is 0x FF 9C. Device The correction value starts from 00 6B. We take the first parameter as an example to illustrate. When there are multiple parameters, the correction value is read and modified in the same way.

| Device Address | Function Code | Start Address | Data Length | Check Code |
|---|---|---|---|---|
| 01 | 03 | 00 6B | 00 01 | F5 D6 |

For the correct query command, the device will respond, for example, the response data is: 01 03 02 00 64 B9 AF, and its format parsing is shown in the following table:

| Device Address | Function Code | Data Length | Correction Value | Check Code |
|---|---|---|---|---|
| 01 | 03 | 02 | 00 64 | B9 AF |

In the response data, the first byte 01 represents the real address of the current device, and 00 6B is the first state correction value register. If the device has multiple parameters, other parameters operate in the same way as this The same, generally temperature and humidity have this parameter, and lighting generally does not have this parameter.

### (2) Change the correction value

For example, if the current state is too small, we want to add 1 to its real value, and add 100 to the current value. The correction operation command is: 01 06 00 6B 00 64 F9 FD .

| Device Address | Function Code | Register Address | Target Address | Check Code |
|---|---|---|---|---|
| 01 | 06 | 00 6B | 00 64 | F9 FD |

After the operation is successful, the device will return the information: 01 06 00 6B 00 64 F9 FD , after the successful change, the parameters will take effect immediately.

For example, the range is -30~80, the analog output is 4~20mA current signal, and current The calculation relationship is as shown in the formula: C = (A2-A1) * (X-B1) / (B2-B1) + A1, where A2 is range upper limit, A1 is the lower limit of the range, B2 is current output range upper limit, B1 is the lower limit, X is the currently

| current(mA) | Value () | Calculation Process |
|---|---|---|
| 4 | -30 | (80-(-30))*(4-4)÷(20-4)+-30 |
| 5 | -23.125 | (80-(-30))*(5-4)÷(20-4)+-30 |
| 6 | -16.25 | (80-(-30))*(6-4)÷(20-4)+-30 |
| 7 | -9.375 | (80-(-30))*(7-4)÷(20-4)+-30 |

| | | |
|---|---|---|
| 8 | -2.5 | (80-(-30))*(8-4)÷(20-4)+-30 |
| 9 | 4.375 | (80-(-30))*(9-4)÷(20-4)+-30 |
| 10 | 11.25 | (80-(-30))*(10-4)÷(20-4)+-30 |
| 11 | 18.125 | (80-(-30))*(11-4)÷(20-4)+-30 |
| 12 | 25 | (80-(-30))*(12-4)÷(20-4)+-30 |
| 13 | 31.875 | (80-(-30))*(13-4)÷(20-4)+-30 |
| 14 | 38.75 | (80-(-30))*(14-4)÷(20-4)+-30 |
| 15 | 45.625 | (80-(-30))*(15-4)÷(20-4)+-30 |
| 16 | 52.5 | (80-(-30))*(16-4)÷(20-4)+-30 |
| 17 | 59.375 | (80-(-30))*(17-4)÷(20-4)+-30 |
| 18 | 66.25 | (80-(-30))*(18-4)÷(20-4)+-30 |
| 19 | 73.125 | (80-(-30))*(19-4)÷(20-4)+-30 |
| 20 | 80 | (80-(-30))*(20-4)÷(20-4)+-30 |

read value, and C is the calculated current value. The list of commonly used values is as follows:

As shown in the above formula, when measuring 8mA, current current is 31.5。

For example, the range is -30~80, the analog output is 0~10V DC0-10Vvoltage signal, and DC0-10Vvoltage The calculation relationship is as shown in the formula: C = (A2-A1) * (X-B1) / (B2-B1) + A1, where A2 is range upper limit, A1 is the lower limit of the range, B2 is DC0-10Vvoltage output range upper limit, B1 is the lower limit, X is the currently read value, and C is the calculated DC0-10Vvoltage value. The list of commonly used values is as follows:

| DC0-10Vvoltage(V) | Value () | Calculation Process |
|---|---|---|
| 0 | -30 | (80-(-30))*(0-0)÷(10-0)+-30 |
| 1 | -19 | (80-(-30))*(1-0)÷(10-0)+-30 |
| 2 | -8 | (80-(-30))*(2-0)÷(10-0)+-30 |
| 3 | 3 | (80-(-30))*(3-0)÷(10-0)+-30 |
| 4 | 14 | (80-(-30))*(4-0)÷(10-0)+-30 |
| 5 | 25 | (80-(-30))*(5-0)÷(10-0)+-30 |
| 6 | 36 | (80-(-30))*(6-0)÷(10-0)+-30 |
| 7 | 47 | (80-(-30))*(7-0)÷(10-0)+-30 |
| 8 | 58 | (80-(-30))*(8-0)÷(10-0)+-30 |
| 9 | 69 | (80-(-30))*(9-0)÷(10-0)+-30 |
| 10 | 80 | (80-(-30))*(10-0)÷(10-0)+-30 |

As shown in the above formula, when measuring 5V, current DC0-10Vvoltage is 55。

## Disclaimer

This document provides all information about the product, does not grant any license to intellectual property, does not express or imply, and prohibits any other means of granting any intellectual property rights, such as the statement of sales terms and conditions of this product, other issues. No liability is assumed. Furthermore, our company makes no warranties, express or implied, regarding the sale and use of this product, including the suitability for the specific use of the product, the marketability or the infringement liability for any patent, copyright or other intellectual property rights, etc. Product specifications and product descriptions may be modified at any time without notice.

## Contact Us

Company: Shanghai Sonbest Industrial Co., Ltd
Address:Building 8,No.215 North east road,Baoshan District,Shanghai,China
Web: http://www.sonbest.com
Web: http://www.sonbus.com
SKYPE: soobuu
Email: sale@sonbest.com
Tel: 86-021-51083595 / 66862055 / 66862075 / 66861077