SR3688B

4-channel wind speed and direction recorder

User Manual

File Version: V23.6.19

SR3688B using the standard RS485 bus MODBUS-RTU protocol,easy access to PLC，DCS and other instruments or systems for monitoring wind speed,conductivity@4 state quantities.The internal use of high-precision sensing core and related devices to ensure high reliability and excellent long-term stability,can be customized RS232,RS485,CAN,4-20mA,DC0~5V\10V,ZIGBEE,Lora,WIFI,GPRS and other output methods.

Technical Parameters

Technical parameter	Parameter value
Brand	SONBEST
Wind speed range	0~30m/s
Start wind	0.2m/s
Wind speed accuracy	±3%
Shell material	aluminum
Wind direction range	0~360°
Wind direction resolution	22.5°
Channels	4
Input	RS485 Sensor
Communication Interface	RS485
Power	DC12~24V 1A
Storage	8M
Max Records	65000
Running temperature	-30~85℃
Working humidity	5%RH~90%RH

Product Size

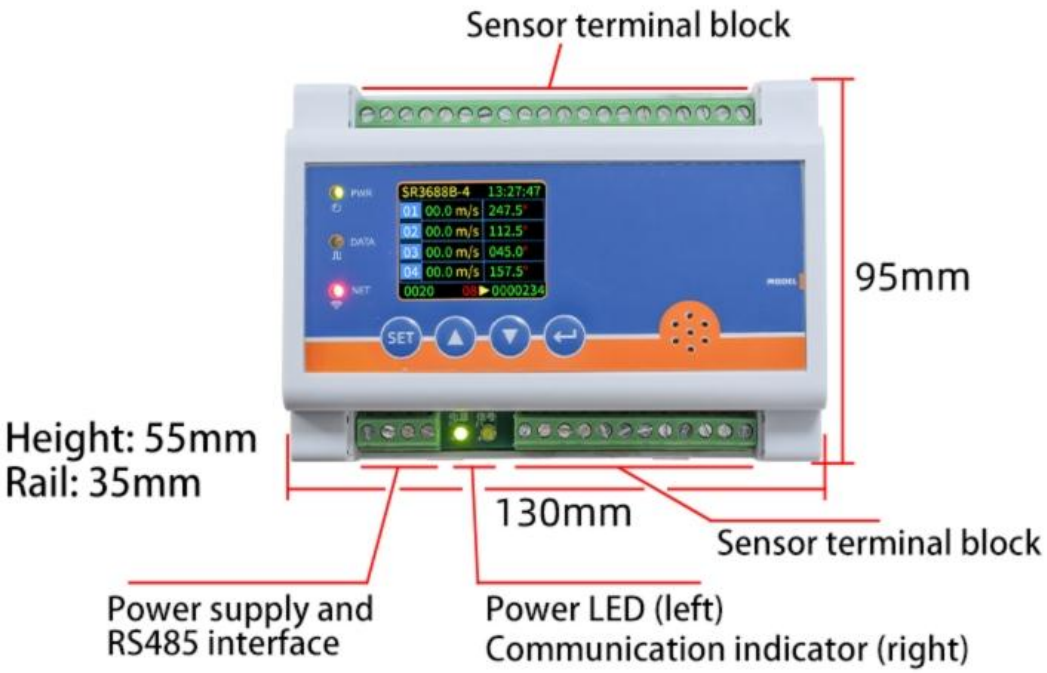

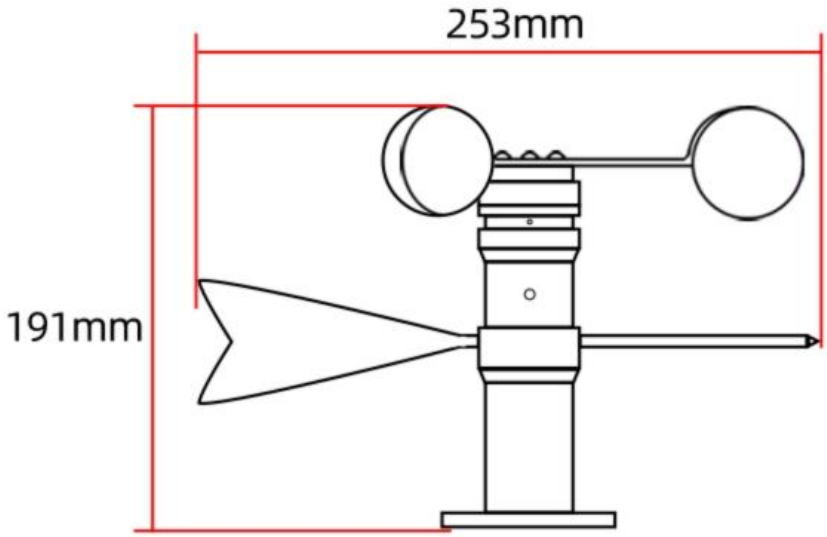

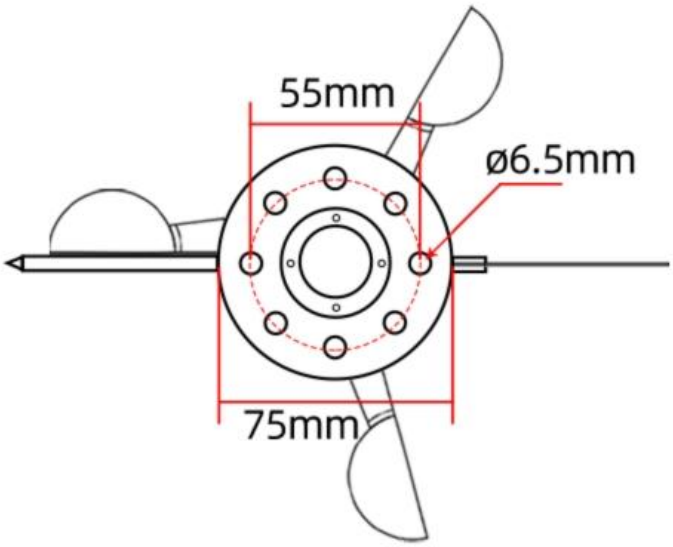

KEY & SCREEN DISPLAY INSTRUCTIONS

SET :Set time & storage parameters

▲▼ :Up and down

↵ :Shift/start & stop timing

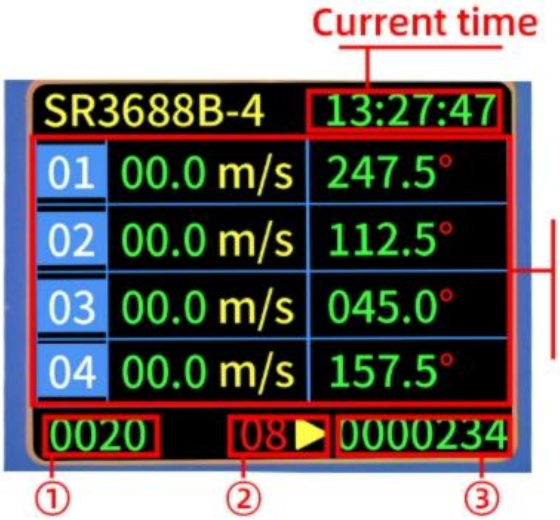

① Upload interval display, up to 100 seconds can be set
This item is set by SET

② When the ↵ button is pressed, when the icon becomes ⏸ , the timing stops on the left

When the ↵ button is pressed, when the icon becomes ▶ , the timing starts on the left

③ Number of records: The number of records will be increased once at the end of the countdown on the left

Press "SET" to enter the clock setting
Use ↵ to shift, adjust the value up and down

Press the second "SET" to enter the storage interval setting
The upper limit can be set to 100 seconds/time

Press the third "SET" to enter the record start point setting
The upper limit can be set to 65101

SOFTWARE INSTRUCTIONS

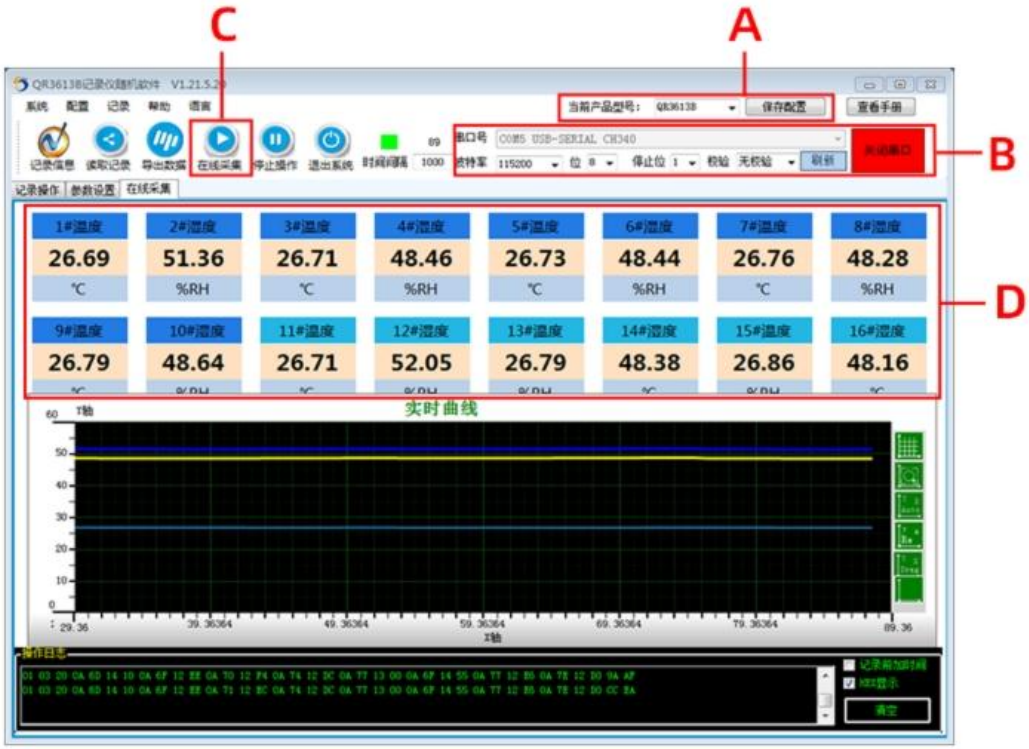

A:After opening the software, enter the main interface, select the corresponding product model at the time of purchase, and save the settings after selection, in case you need to reselect it after opening it next time.

B:Use the USB converter to insert the computer's USB2.0 interface, the driver will be installed automatically,
If the installation fails, you can install it in the driver wizard software. After connecting to the computer,
Select the serial port number: USB-SERIAL CH340 (COM5),set the baud rate
Click to open the serial port to complete the connection.

C D:After opening the serial port, click online collection (C) to see the real-time measurement data (D).

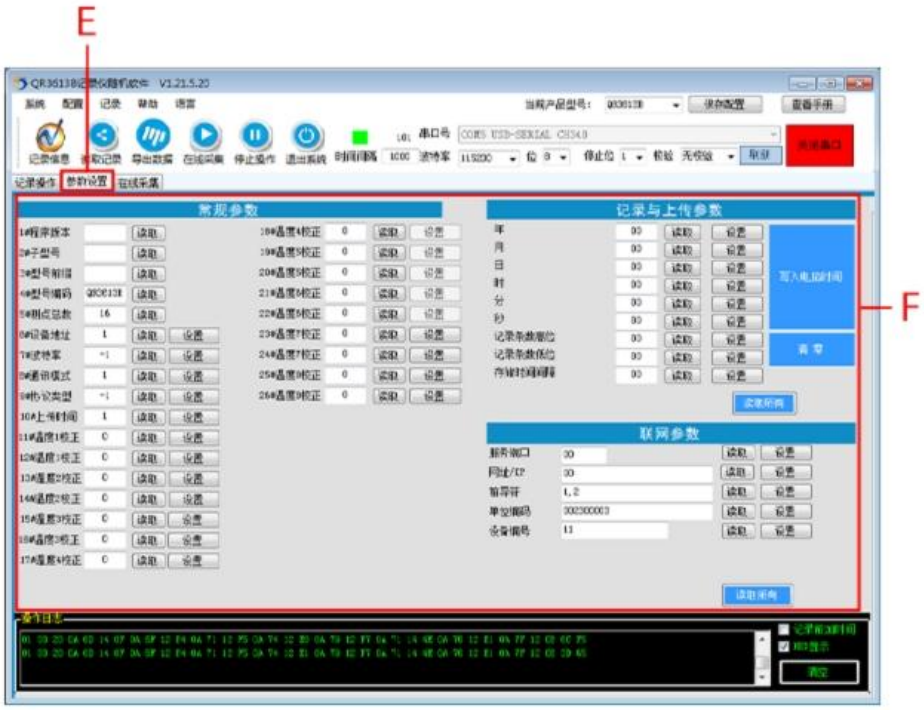

E:Enter the parameter setting interface

F:A variety of parameters can be set in the parameter setting, such as temperature and humidity correction, baud rate, upload time and other parameters. For the parameters on the right, you can click on ''read all'' to set the parameters on the recorder.

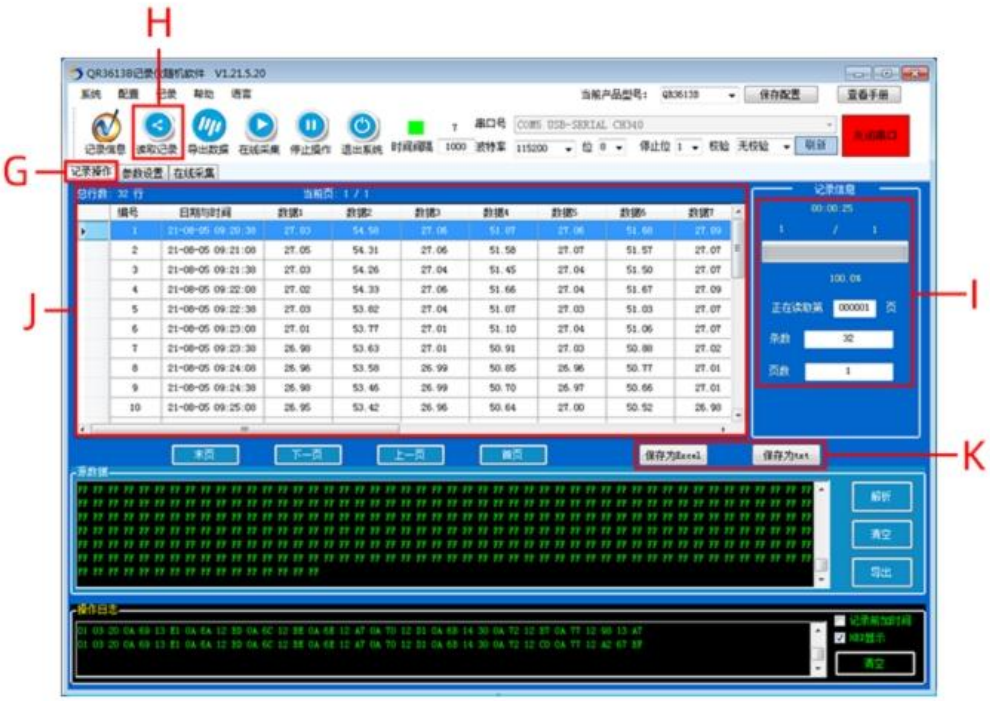

G:Enter the record operation interface

H:Click ''Read Data'' to start transferring the data on the recorder to the software.

I:After the step (H), the number of read data, the total number of data, and the number of pages will be displayed at the top of the reading.

J:The read data will be displayed on it

K:You can export the read data in Excel or txt format

	A	B	C	D	E	F	G	H	I	J	K	L	M	N	O	P	Q	R
1	ID	Time	1#温度	2#湿度	3#温度	4#湿度	5#温度	6#湿度	7#温度	8#湿度	9#温度	10#湿度	11#温度	12#湿度	13#温度	14#湿度	15#湿度	16#湿度
2	1	2021/8/5 9:20	27.03	54.58	27.06	51.87	27.06	51.68	27.09	51.45	27.12	51.83	27.05	55.15	27.13	51.58	27.17	51.32
3	2	2021/8/5 9:21	27.05	54.31	27.06	51.58	27.07	51.57	27.07	51.37	27.09	51.71	27.07	55.11	27.1	51.48	27.18	51.22
4	3	2021/8/5 9:21	27.03	54.26	27.04	51.45	27.04	51.5	27.07	51.29	27.09	51.6	27.05	54.95	27.1	51.39	27.15	51.09
5	4	2021/8/5 9:22	27.02	54.33	27.06	51.66	27.04	51.67	27.09	51.3	27.1	51.65	27.07	55.02	27.09	51.41	27.14	51.09
6	5	2021/8/5 9:22	27.03	53.82	27.04	51.07	27.03	51.03	27.07	50.85	27.1	51.18	27.04	54.49	27.09	50.95	27.13	50.64
7	6	2021/8/5 9:23	27.01	53.77	27.01	51.1	27.04	51.06	27.07	50.85	27.09	51.17	27	54.44	27.06	50.89	27.1	50.69
8	7	2021/8/5 9:23	26.98	53.63	27.01	50.91	27.03	50.88	27.02	50.63	27.05	50.95	25.98	54.3	27.05	50.69	27.11	50.38
9	8	2021/8/5 9:24	26.96	53.58	26.99	50.85	26.95	50.77	27.01	50.66	27.03	50.92	25.97	54.33	27.02	50.77	27.1	50.46
10	9	2021/8/5 9:24	26.98	53.46	26.99	50.7	26.97	50.66	27.01	50.5	27.02	50.74	25.98	54.15	27.04	50.55	27.1	50.2
11	10	2021/8/5 9:25	26.95	53.42	26.96	50.64	27	50.52	26.98	50.29	27	50.62	25.98	53.95	27.04	50.42	27.07	50.17
12	11	2021/8/5 9:25	26.91	53.28	26.92	50.56	26.94	50.32	26.96	50.12	27	50.45	25.91	53.88	27.01	50.3	27.04	50.06
13	12	2021/8/5 9:26	26.91	53.14	26.92	50.43	26.93	50.3	26.96	50.09	26.96	50.42	25.93	53.97	27.01	50.27	27.03	49.99
14	13	2021/8/5 9:26	26.89	53.02	25.9	50.09	26.93	50.17	26.93	49.94	26.96	50.24	25.89	53.69	26.99	50.09	27.03	49.75
15	14	2021/8/5 9:27	26.85	52.7	26.87	49.92	26.93	49.92	26.91	49.68	26.95	49.93	25.89	53.39	26.95	49.81	27	49.48
16	15	2021/8/5 9:27	26.84	52.77	26.86	49.96	26.87	49.91	26.93	49.71	26.92	49.99	25.87	53.5	26.95	49.81	26.99	49.4
17	16	2021/8/5 9:28	26.85	52.3	26.82	49.5	26.87	49.44	26.88	49.17	26.9	49.55	25.84	53.01	26.91	49.31	26.99	49.06
18	17	2021/8/5 9:28	26.79	52.38	26.81	49.62	26.86	49.5	26.87	49.26	26.89	49.69	25.84	53.08	26.88	49.45	26.94	49.19
19	18	2021/8/5 9:29	26.79	52.17	26.81	49.39	26.83	49.32	26.87	49.07	26.86	49.43	26.8	52.88	26.91	49.23	26.94	48.94
20	19	2021/8/5 9:29	26.78	51.95	26.75	49.21	26.8	49.15	26.81	48.92	26.83	49.25	25.77	52.67	26.85	49.01	26.92	48.76
21	20	2021/8/5 9:30	26.75	51.98	26.75	49.2	26.77	49.1	26.8	48.89	26.82	49.29	25.76	52.77	26.84	49.04	26.92	48.79
22	21	2021/8/5 9:30	26.75	51.95	26.73	49.1	26.75	49.02	26.77	48.75	26.79	49.09	25.74	52.59	26.84	48.88	26.89	48.63
23	22	2021/8/5 9:31	26.74	51.71	26.72	48.92	26.76	48.86	26.8	48.69	26.79	49.01	25.74	52.5	26.84	48.82	26.85	48.48
24	23	2021/8/5 9:31	26.72	51.73	26.71	48.91	26.76	48.86	26.76	48.69	26.81	49.08	25.74	52.49	26.81	48.87	26.85	48.61
25	24	2021/8/5 9:32	26.68	51.3	26.71	48.91	26.76	48.86	26.76	48.69	26.81	49.08	25.74	52.49	26.81	48.87	26.85	48.61
26	25	2021/8/5 9:33	26.56	51.23	26.71	48.91	26.76	48.86	26.76	48.69	26.81	49.08	25.74	52.49	26.81	48.87	26.85	48.61
27	26	2021/8/5 9:33	26.72	51.59	26.73	48.69	26.75	48.66	26.78	48.37	26.79	48.9	25.73	52.32	26.81	48.62	26.85	48.45
28	27	2021/8/5 9:34	26.72	51.5	26.72	48.66	26.73	48.66	26.74	48.38	26.78	48.73	26.7	52.17	26.81	48.49	26.85	48.2
29	28	2021/8/5 9:34	26.71	51.35	26.71	48.46	26.72	48.52	26.76	48.38	26.75	48.66	25.71	52.09	26.81	48.43	26.89	48.14
30	29	2021/8/5 9:35	26.68	51.47	26.71	48.65	26.73	48.68	26.76	48.51	26.77	48.89	25.73	52.3	26.77	48.46	26.85	48.21
31	30	2021/8/5 9:32	26.69	41.12	26.71	48.91	26.76	48.86	26.76	48.69	26.81	49.08	25.74	52.49	26.81	48.87	26.85	48.61
32	31	2021/8/5 9:37	26.69	51.07	26.71	48.16	26.59	48.09	26.71	47.93	26.75	48.24	26.7	51.74	26.78	48.09	26.83	47.84
33	32	2021/8/5 9:37	26.68	51.09	26.68	48.18	26.59	48.19	26.71	47.94	26.74	48.25	26.7	51.75	26.74	48.08	26.79	47.77

EXCEL table export preview

文本 - 记事本

文件(F) 编辑(E) 格式(O) 查看(V) 帮助(H)

序号	时间标识	1#温度	2#湿度	3#温度	4#湿度	5#温度	6#湿度	7#温度	8#湿度	9#温度	10#湿度	11#温度	12#湿度	13#温度	14#湿度	15
1	21-08-05 09:20:38	27.03	54.58	27.06	51.87	27.06	51.68	27.09	51.45	27.12	51.83	27.05	55.16	27.13	51.58	27.17	51.32
2	21-08-05 09:21:08	27.05	54.31	27.06	51.58	27.07	51.57	27.07	51.37	27.09	51.71	27.07	55.11	27.10	51.48	27.18	51.22
3	21-08-05 09:21:38	27.03	54.26	27.04	51.45	27.04	51.50	27.07	51.29	27.09	51.60	27.05	54.95	27.10	51.39	27.16	51.09
4	21-08-05 09:22:08	27.02	54.33	27.06	51.66	27.04	51.67	27.09	51.30	27.10	51.66	27.07	55.02	27.09	51.41	27.14	51.09
5	21-08-05 09:22:38	27.03	53.82	27.04	51.07	27.03	51.03	27.07	50.85	27.10	51.18	27.04	54.49	27.09	50.95	27.13	50.64
6	21-08-05 09:23:08	27.01	53.77	27.01	51.10	27.04	51.06	27.07	50.85	27.09	51.17	27.00	54.44	27.06	50.89	27.10	50.69
7	21-08-05 09:23:38	26.98	53.63	27.01	50.91	27.03	50.88	27.02	50.63	27.05	50.95	26.98	54.30	27.05	50.69	27.11	50.38
8	21-08-05 09:24:08	26.96	53.58	26.99	50.85	26.96	50.77	27.01	50.66	27.03	50.92	26.97	54.33	27.02	50.77	27.10	50.46
9	21-08-05 09:24:38	26.98	53.46	26.99	50.70	26.97	50.66	27.01	50.50	27.02	50.74	26.98	54.16	27.04	50.55	27.10	50.20
10	21-08-05 09:25:08	26.95	53.42	26.96	50.64	27.00	50.52	26.98	50.29	27.00	50.62	26.98	53.95	27.04	50.42	27.07	50.17
11	21-08-05 09:25:38	26.91	53.28	26.92	50.56	26.94	50.32	26.96	50.12	27.00	50.45	26.91	53.88	27.01	50.30	27.04	50.06
12	21-08-05 09:26:08	26.91	53.14	26.92	50.43	26.93	50.30	26.96	50.09	26.96	50.42	26.93	53.97	27.01	50.27	27.03	49.99
13	21-08-05 09:26:38	26.89	53.02	26.90	50.09	26.93	50.17	26.93	49.94	26.96	50.24	26.89	53.69	26.99	50.09	27.03	49.75
14	21-08-05 09:27:08	26.85	52.70	26.87	49.92	26.93	49.92	26.91	49.68	26.95	49.93	26.89	53.39	26.95	49.81	27.00	49.48
15	21-08-05 09:27:38	26.84	52.77	26.86	49.96	26.87	49.91	26.93	49.71	26.92	49.99	26.87	53.50	26.95	49.81	26.99	49.40
16	21-08-05 09:28:09	26.85	52.30	26.82	49.50	26.87	49.44	26.88	49.17	26.90	49.55	26.84	53.01	26.91	49.31	26.99	49.06
17	21-08-05 09:28:39	26.79	52.38	26.81	49.62	26.86	49.50	26.87	49.26	26.89	49.69	26.84	53.08	26.88	49.45	26.94	49.19
18	21-08-05 09:29:09	26.79	52.17	26.81	49.39	26.83	49.32	26.87	49.07	26.86	49.43	26.80	52.88	26.91	49.23	26.94	48.94
19	21-08-05 09:29:40	26.78	51.95	26.75	49.21	26.80	49.15	26.81	48.92	26.83	49.25	26.77	52.67	26.85	49.01	26.92	48.76
20	21-08-05 09:30:10	26.75	51.98	26.75	49.20	26.77	49.10	26.80	48.89	26.82	49.29	26.76	52.77	26.84	49.04	26.92	48.79
21	21-08-05 09:30:40	26.75	51.95	26.73	49.10	26.75	49.02	26.77	48.75	26.79	49.09	26.74	52.59	26.84	48.88	26.89	48.63
22	21-08-05 09:31:11	26.74	51.71	26.72	48.92	26.76	48.86	26.80	48.69	26.79	49.01	26.74	52.50	26.84	48.82	26.86	48.48
23	21-08-05 09:31:41	26.72	51.73	26.71	48.91	26.76	48.86	26.76	48.69	26.81	49.08	26.74	52.49	26.81	48.87	26.86	48.61
24	21-08-05 09:32:11	26.68	51.30	26.71	48.91	26.76	48.86	26.76	48.69	26.81	49.08	26.74	52.49	26.81	48.87	26.86	48.61
25	21-08-05 09:33:00	26.56	51.23	26.71	48.91	26.76	48.86	26.76	48.69	26.81	49.08	26.74	52.49	26.81	48.87	26.86	48.61
26	21-08-05 09:33:52	26.72	51.59	26.73	48.69	26.75	48.66	26.78	48.37	26.79	48.90	26.73	52.32	26.81	48.62	26.86	48.45
27	21-08-05 09:34:22	26.72	51.50	26.72	48.66	26.73	48.66	26.74	48.38	26.78	48.73	26.70	52.17	26.81	48.49	26.86	48.20
28	21-08-05 09:34:53	26.71	51.35	26.71	48.46	26.72	48.52	26.76	48.38	26.75	48.66	26.71	52.09	26.81	48.43	26.89	48.14
29	21-08-05 09:35:23	26.68	51.47	26.71	48.65	26.73	48.68	26.76	48.51	26.77	48.89	26.73	52.30	26.77	48.46	26.85	48.21
30	21-08-05 09:32:48	26.69	41.12	26.71	48.91	26.76	48.86	26.76	48.69	26.81	49.08	26.74	52.49	26.81	48.87	26.86	48.61
31	21-08-05 09:37:27	26.69	51.07	26.71	48.16	26.69	48.09	26.71	47.93	26.75	48.24	26.70	51.74	26.78	48.09	26.83	47.84
32	21-08-05 09:37:57	26.68	51.09	26.68	48.18	26.69	48.19	26.71	47.94	26.74	48.25	26.70	51.75	26.74	48.08	26.79	47.77

TXT text export preview

Wiring mode

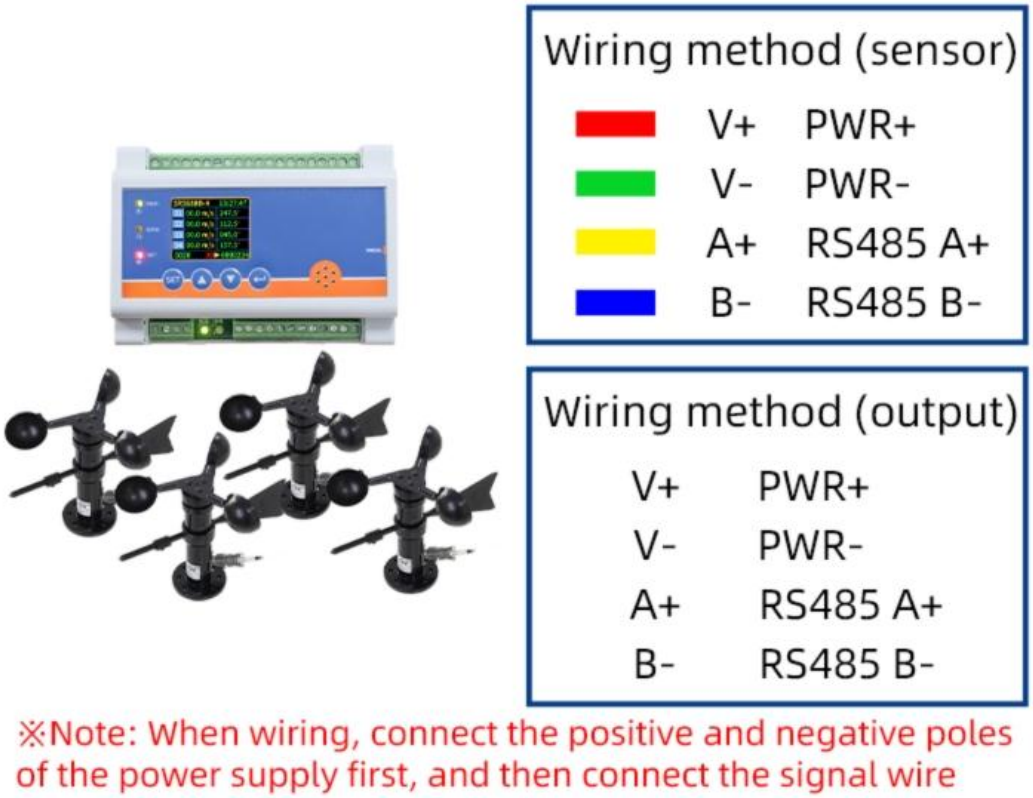

※Note: When wiring, connect the positive and negative poles of the power supply first, and then connect the signal wire

Wiring instructions

In the case of broken wires, wire the wires as shown in the figure. If the product itself has no leads, the core color is for reference.

How to use?

It can be widely used in wind power generation, meteorological monitoring, grassland pastures, transportation ports, construction sites, large power plants, etc

Application solution

■ Single module application scheme

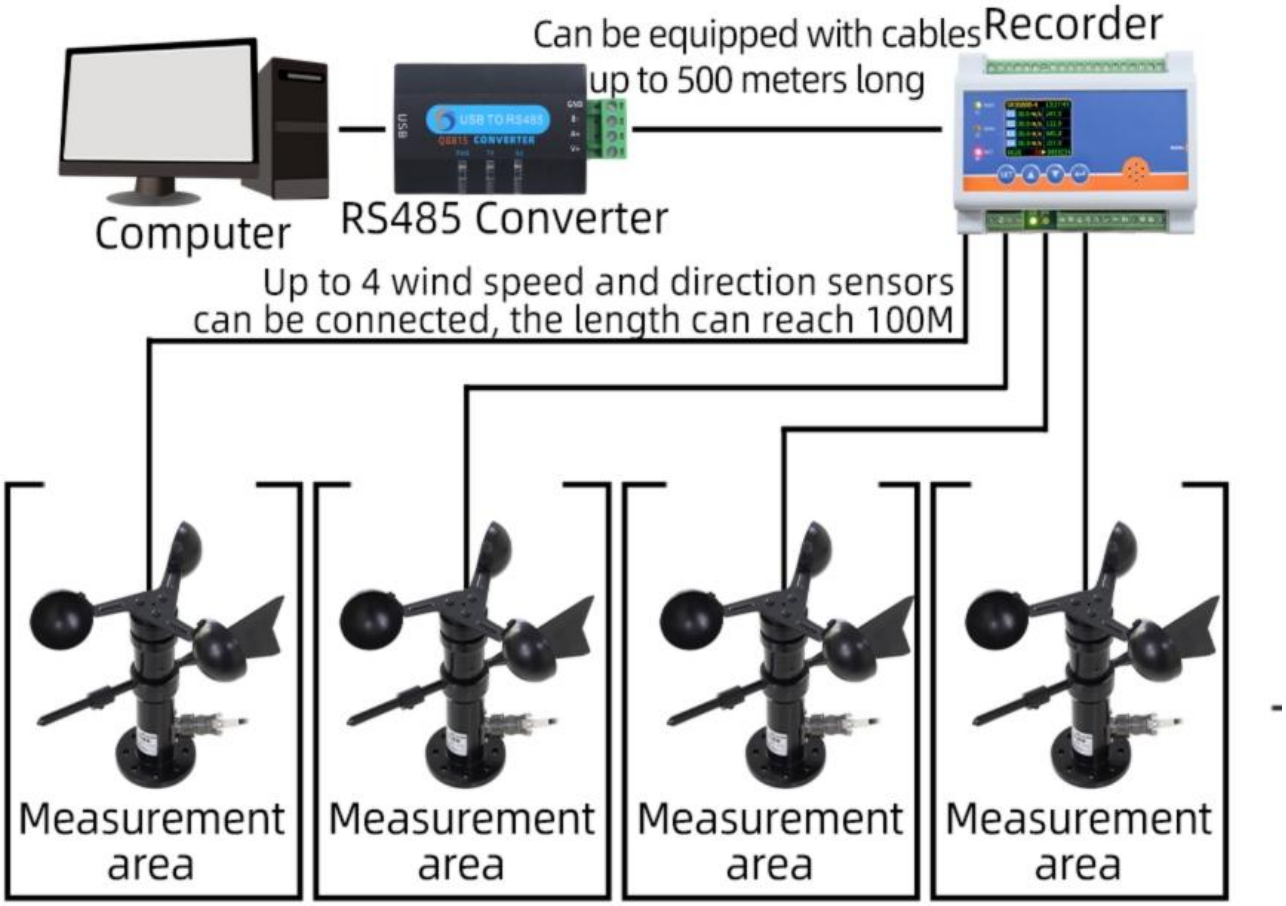

■ Multi-module application scheme

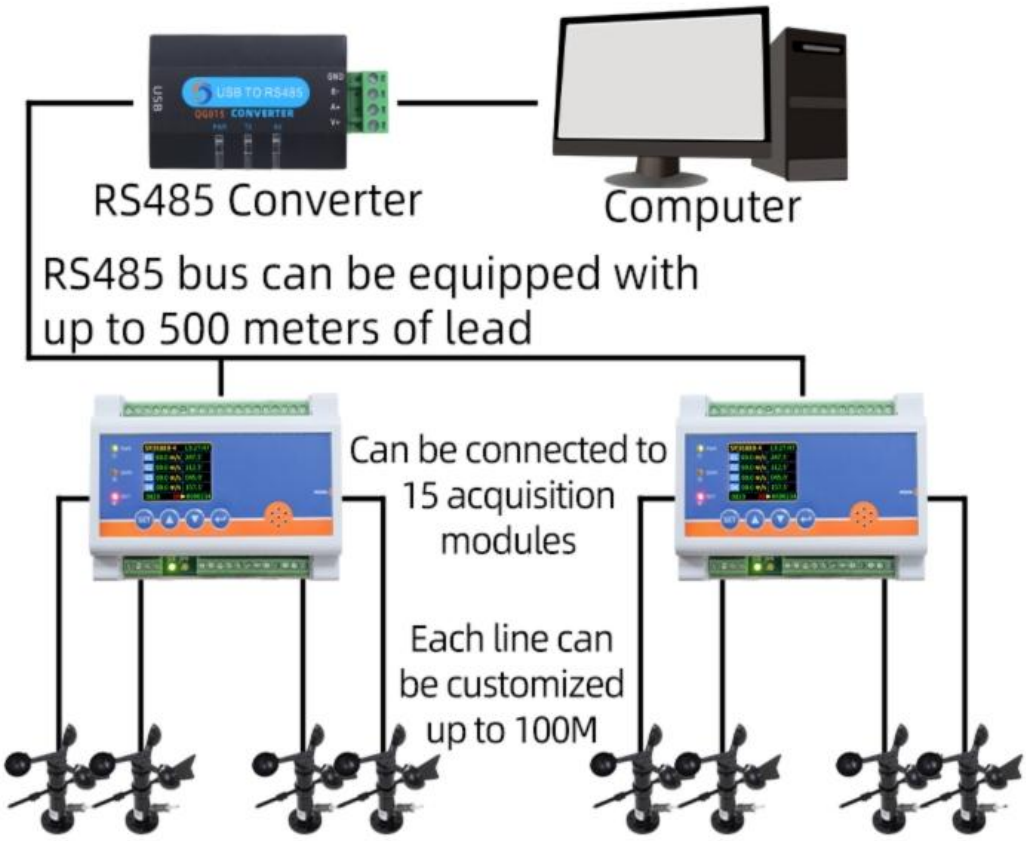

■ External battery usage plan

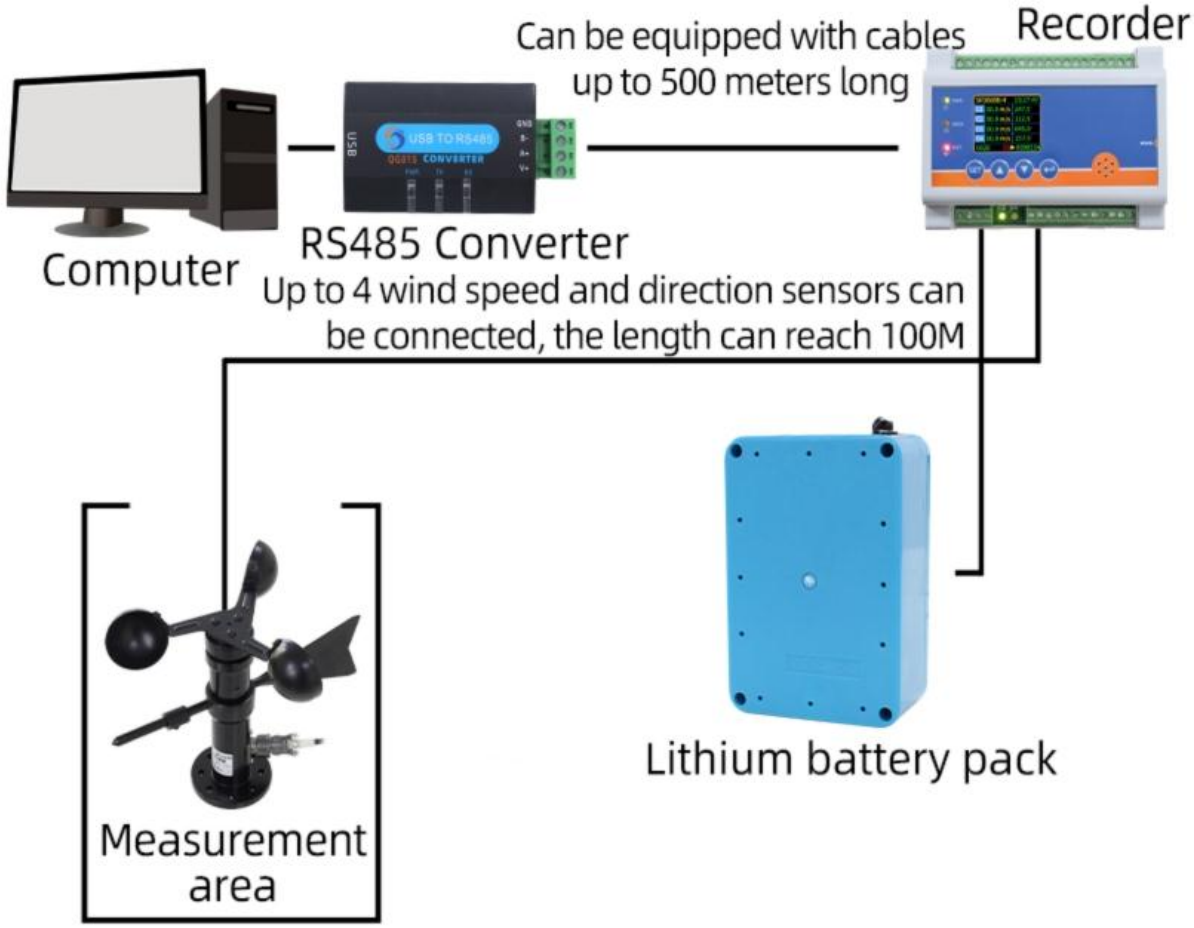

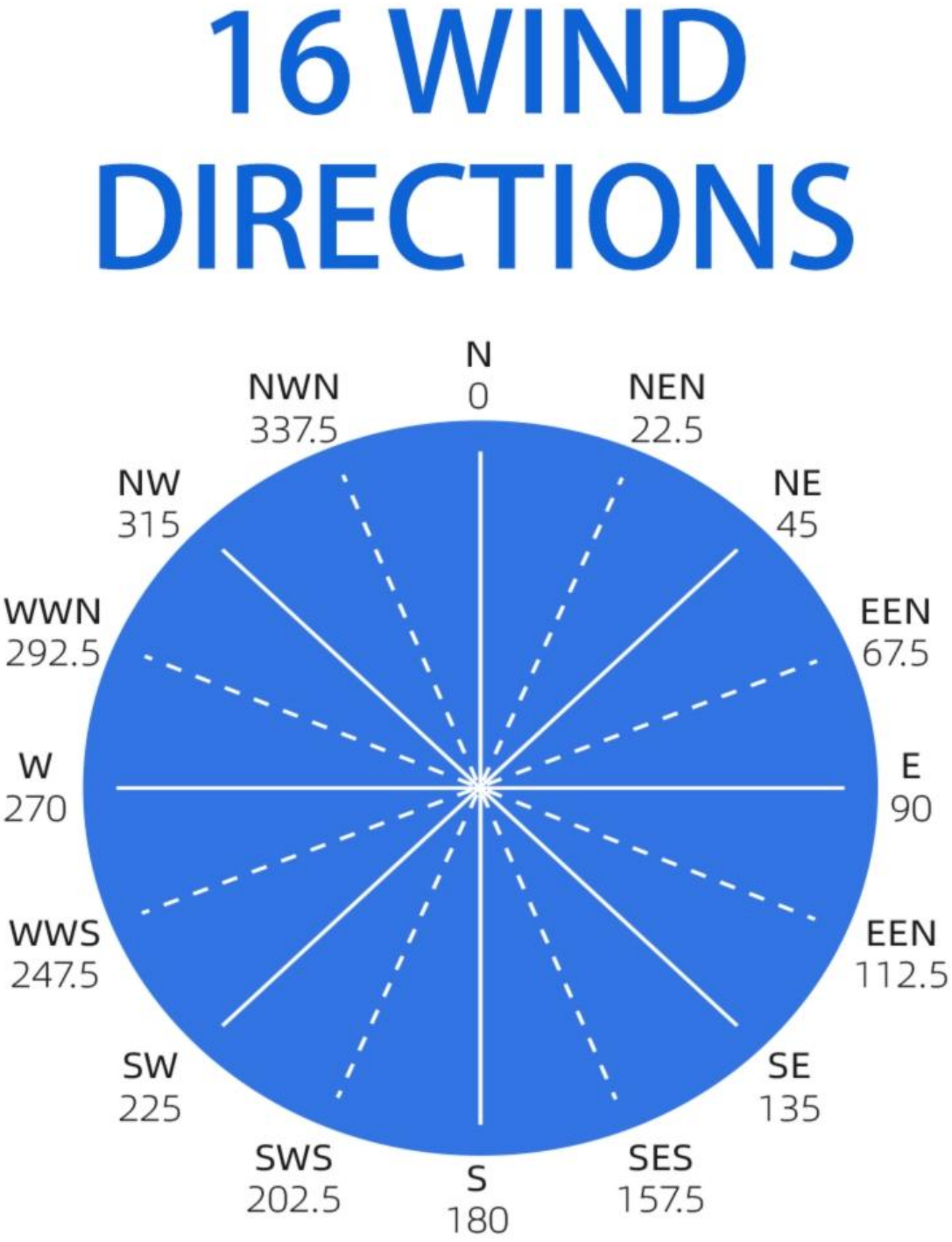

Product List

4-channel wind speed and direction recorder

Isolated USB-RS485 converter (Delivered according to user options)

Wind speed and direction integrated sensor (4 pieces are recommended, other quantities are optional)

Communication Protocol

The product uses RS485 MODBUS-RTU standard protocol format, all operation or reply commands are hexadecimal data. The default device address is 1 when the device leaves the factory, and the module or NON-Recorder default baud rate is 9600,8,n,1 ,but data recorder default baud rate is 115200 .

1. Read data (function code 0x03)

Inquiry frame (hexadecimal), sending example: query 1 data of 1# device, the upper computer sends the command: 01 03 00 00 00 04 44 09 .

Address	Function Code	Start Address	Data Length	Check Code
01	03	00 00	00 04	44 09

For the correct query frame, the device will respond with data: 01 03 08 00 79 00 00 00 0 0 00 00 7D 10 , response format:

Address	Function Code	Length	Data 1	Data 2	Data 3	Data 4	Data 5
01	03	08	00 79	00 7A	00 7B	00 7C	00 7D

Data description: The data in the command is hexadecimal, take data 1 as an example, 00 79 is converted to decimal value as 121, assuming the data magnification is 100, then the real value is 121/100=1.21, Others and so on.

2. Common data address table

Configuration Address	Register Address	Register Description	Data Type	Value Range
40001	00 00	1#wind speed register	Read Only	0~65535
40002	00 01	2#conductivity register	Read Only	0~65535
40003	00 02	3#wind speed register	Read Only	0~65535
40004	00 03	4#conductivity register	Read Only	0~65535
40005	00 04	5#wind speed register	Read Only	0~65535
40006	00 05	6#conductivity register	Read Only	0~65535
...	...	...	...	...
40007	00 06	7#wind speed register	Read Only	0~65535
40008	00 07	8#conductivity register	Read Only	0~65535
40101	00 64	Model Code	Read/Write	0~65535
40102	00 65	total number of measuring points	read/write	1~20
40103	00 66	device address	read/write	1~249
40104	00 67	baud rate	read/write	0~6
40105	00 68	communication mode	read/write	1~4
40106	00 69	protocol type	read/write	1~10

3 Read and modify device address

(1) Read or query device address

If you don't know the current device address and there is only one device on the bus, you can query the device address through the commandFA 03 00 66 00 01 71 9E .

Device Address	Function Code	Start Address	Data Length	Check Code
FA	03	00 66	00 01	71 9E

FA means 250 is the general address, when you don't know the address, you can use 250 to get the real device address, 00 66 is the device address register.

For the correct query command, the device will respond, for example, the response data is: 01 03 02 00 01 79 84, and its format parsing is shown in the following table:

Device Address	Function Code	Start Address	Model Code	Check Code
01	03	02	00 01	79 84

In the response data, the first byte 01 represents the real address of the current device.

(2) Change device address

For example, if the current device address is 1 and we want to change it to 02, the command is: 01 06 00 66 00 02 E8 14 .

Device Address	Function Code	Register Address	Target Address	Check Code
01	06	00 66	00 02	E8 14

After the change is successful, the device will return the information: 02 06 00 66 00 02 E8 27 , and its format analysis is shown in the following table:

Device Address	Function Code	Register Address	Target Address	Check Code
02	06	00 66	00 02	E8 27

In the response data, after the modification is successful, the first byte is the new device address. Generally, after the device address is changed, it will take effect immediately. At this time, the user needs to change the query command of his software accordingly. .

4 Read and modify baud rate

(1) Read baud rate

The default factory baud rate of the device is 9600. If you need to change it, you can change it according to the following table and the corresponding communication protocol. For example, to read the baud rate ID of the current device, the command is: 01 03 00 67 00 01 35 D5 , the format is parsed as follows.

Device Address	Function Code	Start Address	Data Length	Check Code
01	03	00 67	00 01	35 D5

Read the baud rate code of the current device. Baud rate code: 1 is 2400; 2 is 4800; 3 is 9600; 4 is 19200; 5 is 38400; 6 is 115200.

For the correct query command, the device will respond, for example, the response data is: 01 03 02 00 03 F8 45, and its format analysis is shown in the following table:

Device Address	Function Code	Data Length	Baud Rate Code	Check Code
01	03	02	00 03	F8 45

According to the baud rate code, 03 is 9600, that is, the baud rate of the current device is 9600.

(2) Change the baud rate

For example, change the baud rate from 9600 to 38400, that is, change the code from 3 to 5, the command is: 01 06 00 67 00 05 F8 16 .

Device Address	Function Code	Register Address	Target Baud Rate	Check Code
01	06	00 67	00 05	F8 16

Change the baud rate from 9600 to 38400, that is, change the code from 3 to 5. The new baud rate will take effect immediately, and the device will lose response at this time, and the baud rate of the device needs to be checked accordingly Modified.

5 Read and modify correction value

(1) Read correction value

When there is an error between the data and the reference standard, we can reduce the display error by adjusting the correction value. The correction difference can be modified in a range of plus or minus 1000, that is, the value range is 0-1000 or 64535 -65535. For example, when the displayed value is too

small by 100, we can correct it by adding 100. The command is: 01 03 00 6B 00 01 F5 D6 . In the command, 100 is hexadecimal 0x64 ;If you need to reduce it, you can set a negative value, such as -100, the corresponding hexadecimal value is FF 9C, the calculation method is 100-65535=65435, and then converted to hexadecimal, it is 0x FF 9C. Device The correction value starts from 00 6B. We take the first parameter as an example to illustrate. When there are multiple parameters, the correction value is read and modified in the same way.

Device Address	Function Code	Start Address	Data Length	Check Code
01	03	00 6B	00 01	F5 D6

For the correct query command, the device will respond, for example, the response data is: 01 03 02 00 64 B9 AF, and its format parsing is shown in the following table:

Device Address	Function Code	Data Length	Correction Value	Check Code
01	03	02	00 64	B9 AF

In the response data, the first byte 01 represents the real address of the current device, and 00 6B is the first state correction value register. If the device has multiple parameters, other parameters operate in the same way as this The same, generally temperature and humidity have this parameter, and lighting generally does not have this parameter.

(2) Change the correction value

For example, if the current state is too small, we want to add 1 to its real value, and add 100 to the current value. The correction operation command is: 01 06 00 6B 00 64 F9 FD .

Device Address	Function Code	Register Address	Target Address	Check Code
01	06	00 6B	00 64	F9 FD

After the operation is successful, the device will return the information: 01 06 00 6B 00 64 F9 FD , after the successful change, the parameters will take effect immediately.

Disclaimer

This document provides all information about the product, does not grant any license to intellectual property, does not express or imply, and prohibits any other means of granting any intellectual property rights, such as the statement of sales terms and conditions of this product, other issues. No liability is assumed. Furthermore, our company makes no warranties, express or implied, regarding the sale and use of this product, including the suitability for the specific use of the product, the marketability or the infringement liability for any patent, copyright or other intellectual property rights, etc. Product specifications and product descriptions may be modified at any time without notice.

Contact Us

Company: Shanghai Sonbest Industrial Co., Ltd
Address:Building 8,No.215 North east road,Baoshan District,Shanghai,China
Web: http://www.sonbest.com
Web: http://www.sonbus.com
SKYPE: soobuu
Email: sale@sonbest.com
Tel: 86-021-51083595 / 66862055 / 66862075 / 66861077