XM8165

Noise sensors

User Manual

File Version: V24.2.22

XM8165 using the standard ,easy access to PLC， DCS and other instruments or systems for

monitoring noise state quantities.The internal use of high-precision sensing core and related devices to ensure high reliability and excellent long-term stability,can be customized RS232,RS485,CAN,4-20mA,DC0~5V\10V,ZIGBEE,Lora,WIFI,GPRS and other output methods.

Technical Parameters

Technical parameter	Parameter value
Brand	XUNCHIP
Noise range	30~130dB
Noise accuracy	±3%
Interface	RS485/4-20mA/DC0-10V
Power	DC5~24V 1A
Power	DC12~24V 1A
Running temperature	-30~85℃
Working humidity	5%RH~90%RH

Product Selection

Product DesignRS485,4-20mA,DC0-10VMultiple output methods, the products are divided into the following models depending on the output method.

Product model	output method
XM8165B	RS485 总线
XM8165M	4-20mA
XM8165V10	DC0-10V

Product Size

Communication protocols

All operation commands are hexadecimal data, and the default communication baud rate: 9600,8,N,1

Read the data function code 03

Query frame (hexadecimal), send example: query 1# device data,

The host computer sends commands: 01 03 00 00 00 01 84 0a

Command description	Device address	Feature codes	Start address	The length of the data	Checksum
Device address	01	03	00 00	00 01	84 0A

Response frame (hexadecimal): 01 03 02 02 18 B9 2E

Command description	Device address	Feature codes	Start address	The length of the data	Checksum
Device address	01	03	02	02 18	B9 2E

In the above example, the data occupies a total of 2 bytes, for example, the data is 02 18, and the decimal value is 536.

For the noise sensor, the magnification is 10 and the illuminance data is 536 lux.

A table of commonly used data addresses

Configure the address	Register address	illustrate	Data type	Range of values
40001	00 00	Noise registers	Read only	0~65535
.....	.....	.....	.....	.....
40101	00 64	Model number	Read only	0~9999
40102	00 65	The total number of measurement points	Read only	0~999
40103	00 66	Device address	Read/Write	0~249
40104	00 67	Polt rate	Read/Write	0~6
40105	00 68	Communication mode	Read/Write	0~2
40106	00 69	Protocol type	Read/Write	1

Wiring

RS485 wiring

Red	VIN
Green	GND
Yellow	A+/H
Blue	B-/T

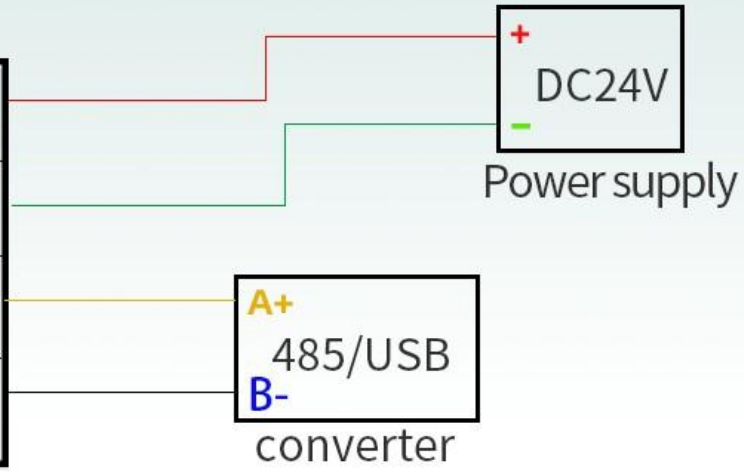

4~20MA wiring

Red	VIN
Green	GND
Yellow	A+/H
Blue	B-/T 未使用

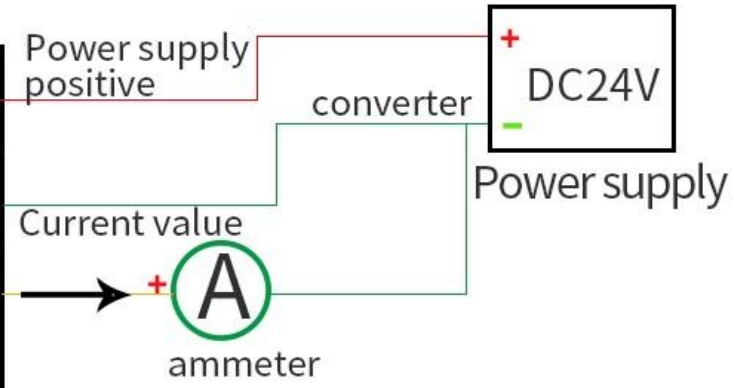

0~10V wiring

Red	VIN
Green	GND
Yellow	A+/H
Blue	B-/T

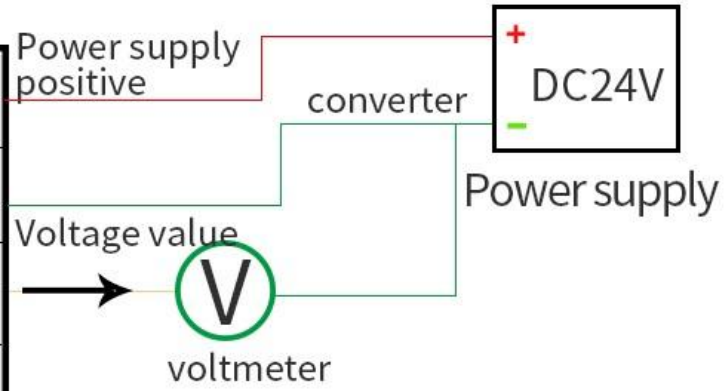

In the case of broken wires, wire the wires as shown in the figure. If the product itself has no leads, the core color is for reference.

How to use?

Product List

1 noise sensor will be delivered according to the user's choice

Communication Protocol

The product uses RS485 MODBUS-RTU standard protocol format, all operation or reply commands are hexadecimal data. The default device address is 1 when the device leaves the factory, and the module or NON-Recorder default baud rate is 9600,8,n,1 ,but data recorder default baud rate is 115200 .

1. Read data (function code 0x03)

Inquiry frame (hexadecimal), sending example: query 1 data of 1# device, the upper computer sends the command: 01 03 00 00 00 01 84 0A .

Address	Function Code	Start Address	Data Length	Check Code
01	03	00 00	00 01	84 0A

For the correct query frame, the device will respond with data: 01 03 02 00 79 79 A6 , response format:

Address	Function Code	Length	Data 1	Check Code
01	03	02	00 79	79 A6

Data description: The data in the command is hexadecimal, take data 1 as an example, 00 79 is converted to decimal value as 121, assuming the data magnification is 100, then the real value is 121/100=1.21, Others and so on.

2. Common data address table

Configuration Address	Register Address	Register Description	Data Type	Value Range
40001	00 00	noise	Read Only	0~65535
40101	00 64	Model Code	Read/Write	0~65535
40102	00 65	total number of	read/write	1~20

		measuring points		
40103	00 66	device address	read/write	1~249
40104	00 67	baud rate	read/write	0~6
40105	00 68	communication mode	read/write	1~4
40106	00 69	protocol type	read/write	1~10

3 Read and modify device address

(1) Read or query device address

If you don't know the current device address and there is only one device on the bus, you can query the device address through the commandFA 03 00 66 00 01 71 9E .

Device Address	Function Code	Start Address	Data Length	Check Code
FA	03	00 66	00 01	71 9E

FA means 250 is the general address, when you don't know the address, you can use 250 to get the real device address, 00 66 is the device address register.

For the correct query command, the device will respond, for example, the response data is: 0 1 03 02 00 01 79 84, and its format parsing is shown in the following table:

Device Address	Function Code	Start Address	Model Code	Check Code
01	03	02	00 01	79 84

In the response data, the first byte 01 represents the real address of the current device.

(2) Change device address

For example, if the current device address is 1 and we want to change it to 02, the command is: 01 06 00 66 00 02 E8 14 .

Device Address	Function Code	Register Address	Target Address	Check Code
01	06	00 66	00 02	E8 14

After the change is successful, the device will return the information: 02 06 00 66 00 02 E8 27 , and its format analysis is shown in the following table:

Device Address	Function Code	Register Address	Target Address	Check Code
02	06	00 66	00 02	E8 27

In the response data, after the modification is successful, the first byte is the new device address. Generally, after the device address is changed, it will take effect immediately. At this time, the user needs to change the query command of his software accordingly. .

4 Read and modify baud rate

(1) Read baud rate

The default factory baud rate of the device is 9600. If you need to change it, you can change it according to the following table and the corresponding communication protocol. For example, to read the baud rate ID of the current device, the command is: 01 03 00 67 00 01 35 D5 , the format is parsed as follows.

Device Address	Function Code	Start Address	Data Length	Check Code
01	03	00 67	00 01	35 D5

Read the baud rate code of the current device. Baud rate code: 1 is 2400; 2 is 4800; 3 is 9600; 4 is 19200; 5 is 38400; 6 is 115200.

For the correct query command, the device will respond, for example, the response data is: 01 03 02 00 03 F8 45, and its format analysis is shown in the following table:

Device Address	Function Code	Data Length	Baud Rate Code	Check Code
01	03	02	00 03	F8 45

According to the baud rate code, 03 is 9600, that is, the baud rate of the current device is 9600.

(2) Change the baud rate

For example, change the baud rate from 9600 to 38400, that is, change the code from 3 to 5, the command is: 01 06 00 67 00 05 F8 16 .

Device Address	Function Code	Register Address	Target Baud Rate	Check Code
01	06	00 67	00 05	F8 16

Change the baud rate from 9600 to 38400, that is, change the code from 3 to 5. The new baud rate will take effect immediately, and the device will lose response at this time, and the baud rate of the device needs to be checked accordingly Modified.

5 Read and modify correction value

(1) Read correction value

When there is an error between the data and the reference standard, we can reduce the display error by adjusting the correction value. The correction difference can be modified in a range of plus or minus 1000, that is, the value range is 0-1000 or 64535 -65535. For example, when the displayed value is too small by 100, we can correct it by adding 100. The command is: 01 03 00 6B 00 01 F5 D6 . In the command, 100 is hexadecimal 0x64 ;If you need to reduce it, you can set a negative value, such as -100, the corresponding hexadecimal value is FF 9C, the calculation method is 100-65535=65435, and then converted to hexadecimal, it is 0x FF 9C. Device The correction value starts from 00 6B. We take the first parameter as an example to illustrate. When there are multiple parameters, the correction value is read and modified in the same way.

Device Address	Function Code	Start Address	Data Length	Check Code
01	03	00 6B	00 01	F5 D6

For the correct query command, the device will respond, for example, the response data is: 01 03 02 00 64 B9 AF, and its format parsing is shown in the following table:

Device Address	Function Code	Data Length	Correction Value	Check Code
01	03	02	00 64	B9 AF

In the response data, the first byte 01 represents the real address of the current device, and 00 6B is the first state correction value register. If the device has multiple parameters, other parameters operate in the same way as this The same, generally temperature and humidity have this parameter, and lighting generally does not have this parameter.

(2) Change the correction value

For example, if the current state is too small, we want to add 1 to its real value, and add 100 to the current value. The correction operation command is: 01 06 00 6B 00 64 F9 FD .

Device Address	Function Code	Register Address	Target Address	Check Code
01	06	00 6B	00 64	F9 FD

After the operation is successful, the device will return the information: 01 06 00 6B 00 64 F9 FD , after the successful change, the parameters will take effect immediately.

For example, the range is 30~130dB, the analog output is 4~20mA current signal, noise and current The calculation relationship is as shown in the formula: C = (A2-A1) * (X-B1) / (B2-B1) + A1, where A2 is noise range upper limit, A1 is the lower limit of the range, B2 is current output range upper limit , B1 is the

lower limit, X is the currently read noise value, and C is the calculated current value. The list of commonly used values is as follows:

current(mA)	noiseValue (dB)	Calculation Process
4	30.0	(130-30)*(4-4)÷(20-4)+30
5	36.3	(130-30)*(5-4)÷(20-4)+30
6	42.5	(130-30)*(6-4)÷(20-4)+30
7	48.8	(130-30)*(7-4)÷(20-4)+30
8	55.0	(130-30)*(8-4)÷(20-4)+30
9	61.3	(130-30)*(9-4)÷(20-4)+30
10	67.5	(130-30)*(10-4)÷(20-4)+30
11	73.8	(130-30)*(11-4)÷(20-4)+30
12	80.0	(130-30)*(12-4)÷(20-4)+30
13	86.3	(130-30)*(13-4)÷(20-4)+30
14	92.5	(130-30)*(14-4)÷(20-4)+30
15	98.8	(130-30)*(15-4)÷(20-4)+30
16	105.0	(130-30)*(16-4)÷(20-4)+30
17	111.3	(130-30)*(17-4)÷(20-4)+30
18	117.5	(130-30)*(18-4)÷(20-4)+30
19	123.8	(130-30)*(19-4)÷(20-4)+30
20	130.0	(130-30)*(20-4)÷(20-4)+30

As shown in the above formula, when measuring 8mA, current current is 29dB。

For example, the range is 30~130dB, the analog output is 0~10V DC0-10Vvoltage signal, noise and DC0-10Vvoltage The calculation relationship is as shown in the formula: C = (A2-A1) * (X-B1) / (B2-B1) + A1, where A2 is noise range upper limit, A1 is the lower limit of the range, B2 is DC0-10Vvoltage output range upper limit, B1 is the lower limit, X is the currently read noise value, and C is the calculated DC0-10Vvoltage value. The list of commonly used values is as follows:

DC0-10Vvoltage(V)	noiseValue (dB)	Calculation Process
0	30.0	(130-30)*(0-0)÷(10-0)+30
1	40.0	(130-30)*(1-0)÷(10-0)+30
2	50.0	(130-30)*(2-0)÷(10-0)+30
3	60.0	(130-30)*(3-0)÷(10-0)+30
4	70.0	(130-30)*(4-0)÷(10-0)+30
5	80.0	(130-30)*(5-0)÷(10-0)+30
6	90.0	(130-30)*(6-0)÷(10-0)+30
7	100.0	(130-30)*(7-0)÷(10-0)+30
8	110.0	(130-30)*(8-0)÷(10-0)+30
9	120.0	(130-30)*(9-0)÷(10-0)+30
10	130.0	(130-30)*(10-0)÷(10-0)+30

As shown in the above formula, when measuring 5V, current DC0-10Vvoltage is 50dB。

Disclaimer

This document provides all information about the product, does not grant any license to intellectual property, does not express or imply, and prohibits any other means of granting any intellectual property

rights, such as the statement of sales terms and conditions of this product, other issues. No liability is assumed. Furthermore, our company makes no warranties, express or implied, regarding the sale and use of this product, including the suitability for the specific use of the product, the marketability or the infringement liability for any patent, copyright or other intellectual property rights, etc. Product specifications and product descriptions may be modified at any time without notice.

Contact Us

Brand: XUNCHIP

Address: Room 208, Building 8, No. 215, Nandong Road, Baoshan District, Shanghai, Xinxin Brand Business Department

Chinese site: http://www.xunchip.com

International site: http://www.xunchip.com

SKYPE: soobuu

E-mail: sale@sonbest.com

Tel: 86-021-51083595 / 66862055 / 66862075 / 66861077